Electronic Ignition Systems - Diagnostic Methods for Electrical Issues

Tom Parks
Coastroad Hearth and Patio

Part Three of Electricity Basics
Diagnosing and fixing problems with an electronic ignition system can be frustrating. Understanding how the electronic valves, pilot assemblies and control modules work together can simplify troubleshooting and make repairs relatively quick and easy through the process of elimination. This session builds on the understanding of how electromagnetics run millivolt gas systems in Part Two.

2020 HPBExpo Education
Sponsored by:

ELECTRICITY BASICS PART 3

ELECTRONIC IGNITION

TROUBLESHOOTING

Tom Parks
COASTROAD

NATIONAL FIREPLACE INSTITUTE
MHP
MASTER HEARTH PROFESSIONAL

PURPOSES AND LIMITATIONS

This presentation has been prepared for informational purposes only and does not reflect the views of the Hearth, Patio & Barbecue Education Foundation (HPBEF) or the contributing agencies and companies, nor constitute an endorsement of any commercial product or person. Neither HPBEF nor its officers, employees, or agents makes any warranty with respect to this presentation or assumes any liability arising from the use of this presentation.

REMINDER

Do not perform any work that you are not qualified or licensed to perform. The information provided during this presentation does not in any way encourage anyone to risk their professional status or personal health by engaging in work that they are unqualified to do. Merely attending this presentation will not make someone qualified to do electrical work.

Working with electricity can be extremely dangerous. Do not put yourself or others at risk by doing work that you shouldn't.

OVERVIEW

The ability to troubleshoot hearth products has become increasingly dependent on an understanding of electricity and electronics. Some technicians have tried to avoid those aspects of our work because of a lack of confidence or outright fear. Knowledge and experience will allow any technician to successfully troubleshoot the electronic systems we encounter.

That being said, we are going to try to cram a years worth of information into 60 minutes . . .

OVERVIEW

Terminology & Basics (Part 1)

Millivolt systems (Part 2)

Electronic ignition

Good practices

OVERVIEW

- It is important to have a basic understanding of these topics:
  - The relationship between voltage, current and resistance (Part 1)
  - Electromagnetism & the Seebeck effect (part 2)
  - Open and closed circuits (Part 1)
  - Electronic flame sensing
  - How to use basic diagnostic tools

TERMINOLOGY

Electricity is the movement of free atomic particles – electrons – through materials. The ability of a material to let electrons flow freely is **conductivity**.

Some materials are very conductive: gold, copper, steel, etc.

Some are not: glass, ceramic, silicone (insulators).

In some cases, dirt, corrosion, oxidation, condensation and other foreign matter can make conductive materials less conductive *and vice versa*.

TERMINOLOGY

A **source** is the power supply, either alternating current (AC) or direct current (DC).

A wall outlet is AC, a battery pack is DC, a transformer can be either one.

Voltage is the *force* that drive the electrons, analogous to water ***pressure***.

Low voltage can be handled safely because it does not have the strength to overcome the resistance of our skin.

Line voltage (110-120VAC) is powerful enough to break the skin resistance and give a person a shock.

High voltage (thousands of volts) can jump through the air, as in a piezo ignitor or other spark ignition.

A millivolt is one thousandth of a volt, so 500 MV = ½ volt

TERMINOLOGY

A **ground** may mean a current path to the earth, as in a grounding rod, but usually we are referring to a chassis ground, which is generally used as a common connection for low voltage in electronic ignition systems

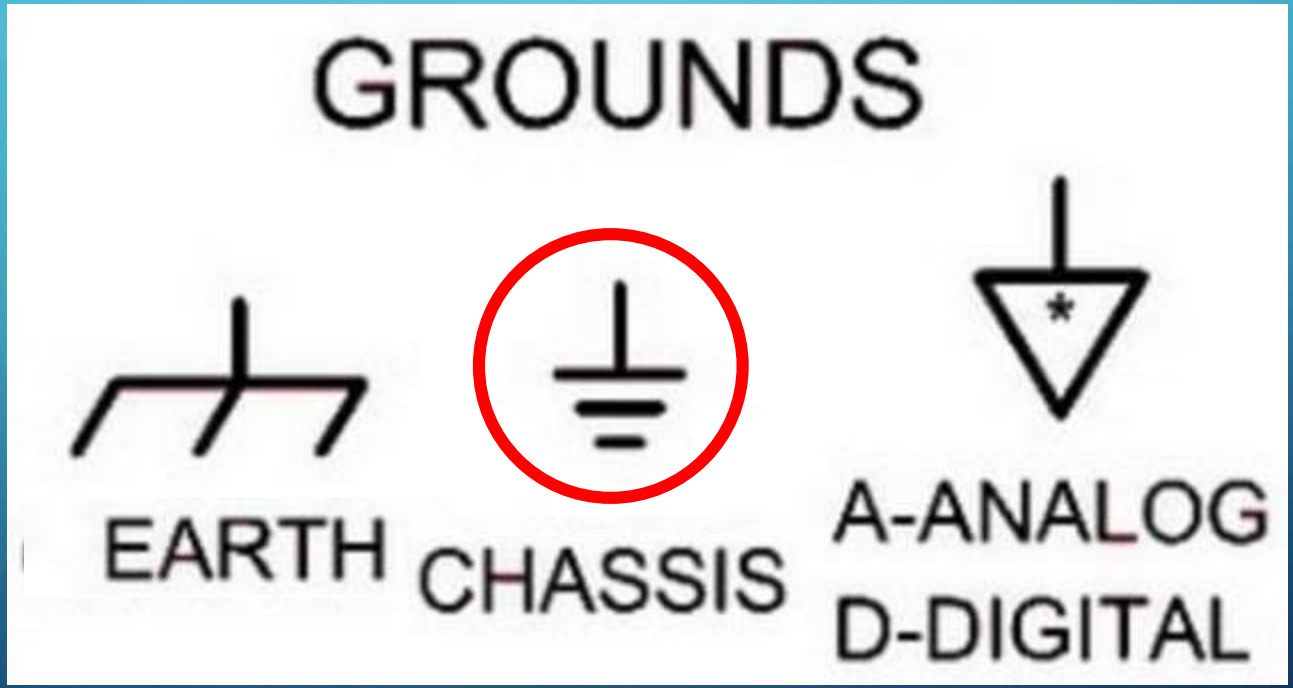

VISUAL IDENTIFICATION

Understanding wiring diagrams and procedures for troubleshooting is very important

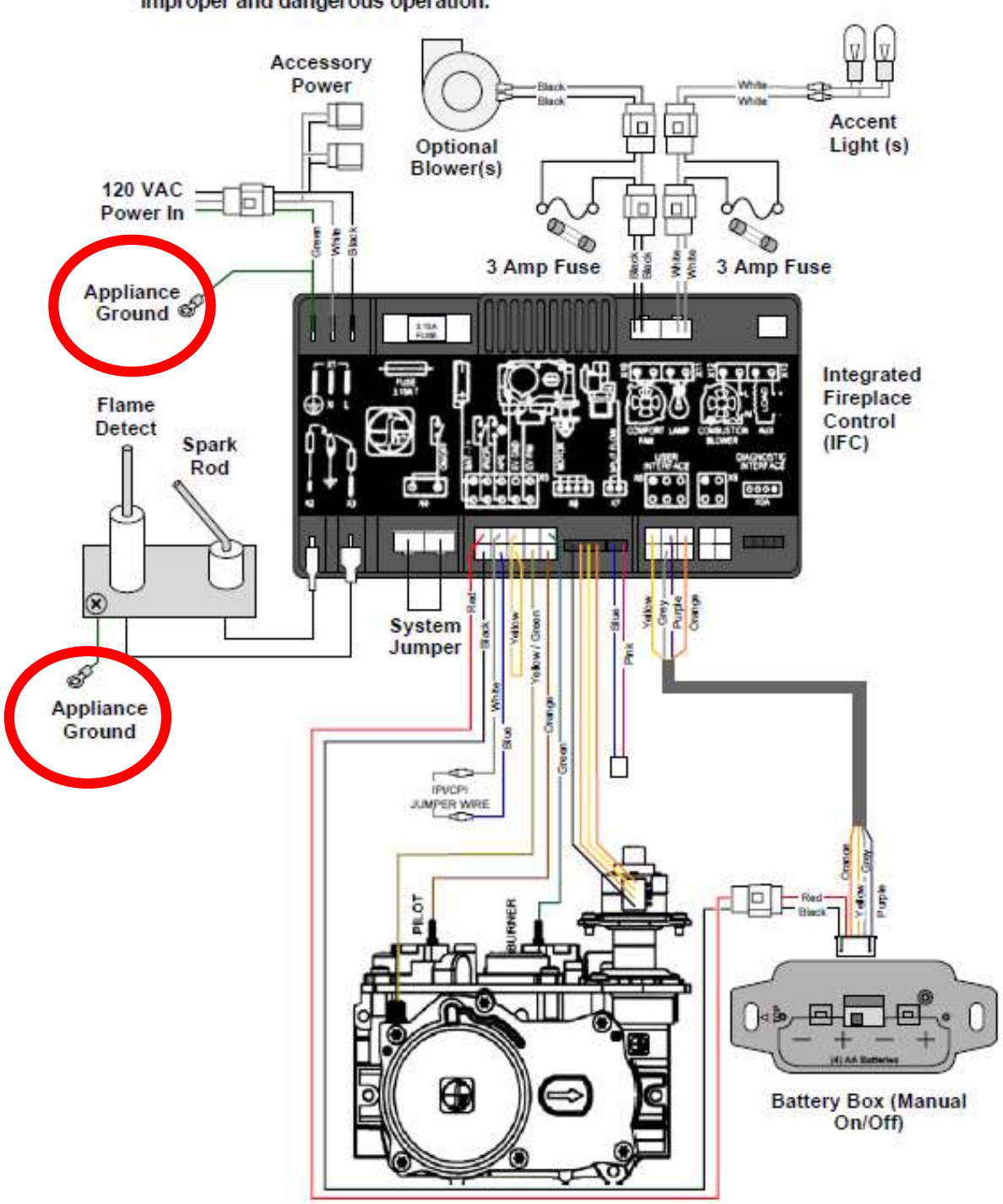

VISUAL ID

Understanding wiring diagrams and procedures for troubleshooting is very important

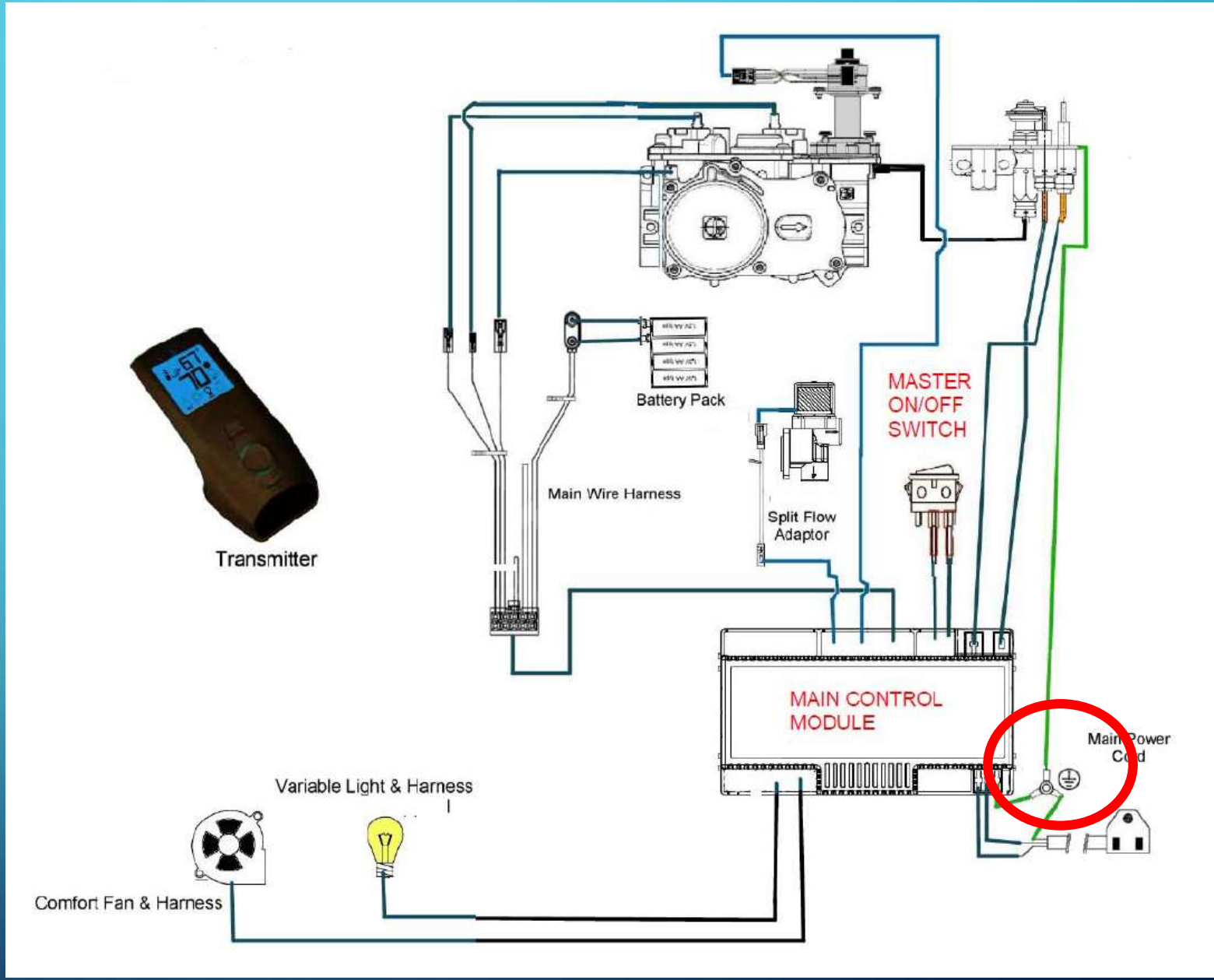

VISUAL IDENTIFICATION

Understanding wiring diagrams and procedures for troubleshooting is very important

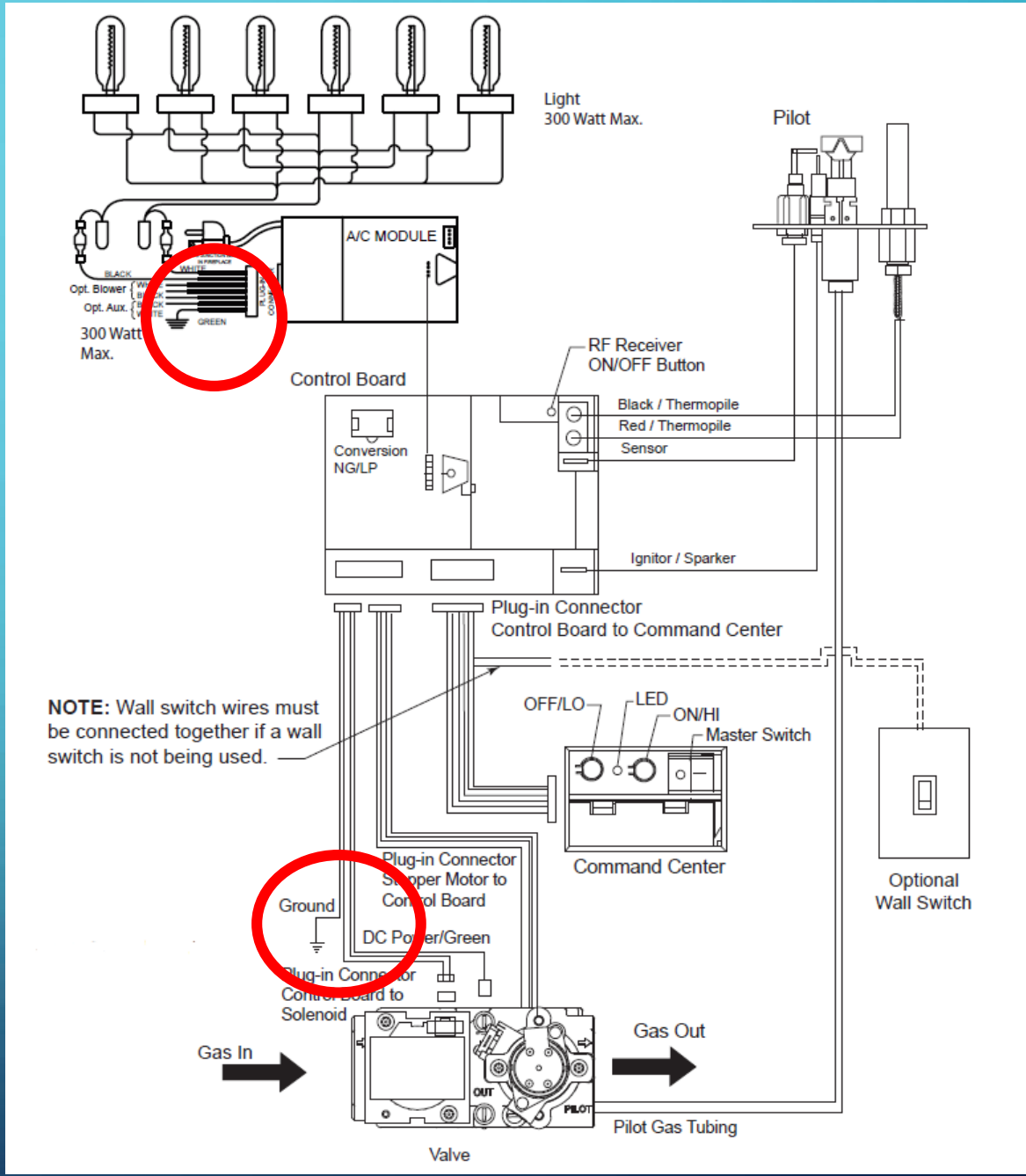

DIGITAL MULTIMETER

- Need Direct Current **volts.** down to millivolts (thermocouples, thermopiles)
- Need Alternating Current **volts** (house current, transformers)
- Need **Ohms** (resistance)
- Continuity is nice
- Rarely need Amps (current) except for HSI systems

ELECTROMAGNETISM

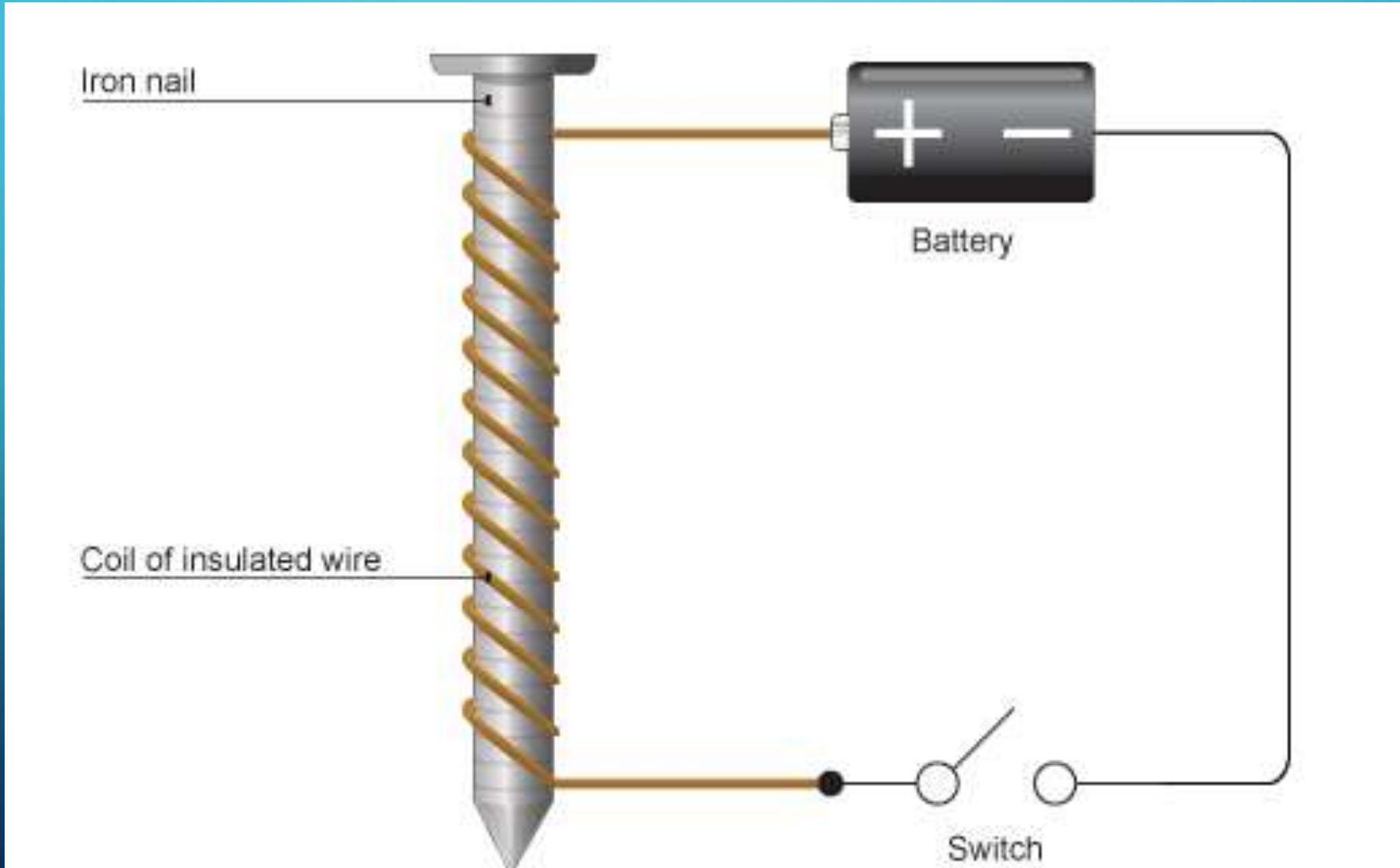

ELECTRONIC IGNITION VALVE

- sample valve – may vary
- Pilot to the right (orange)
- Main valve on the left (green)
- Slide spade off slightly to clip on test lead and test V to valve

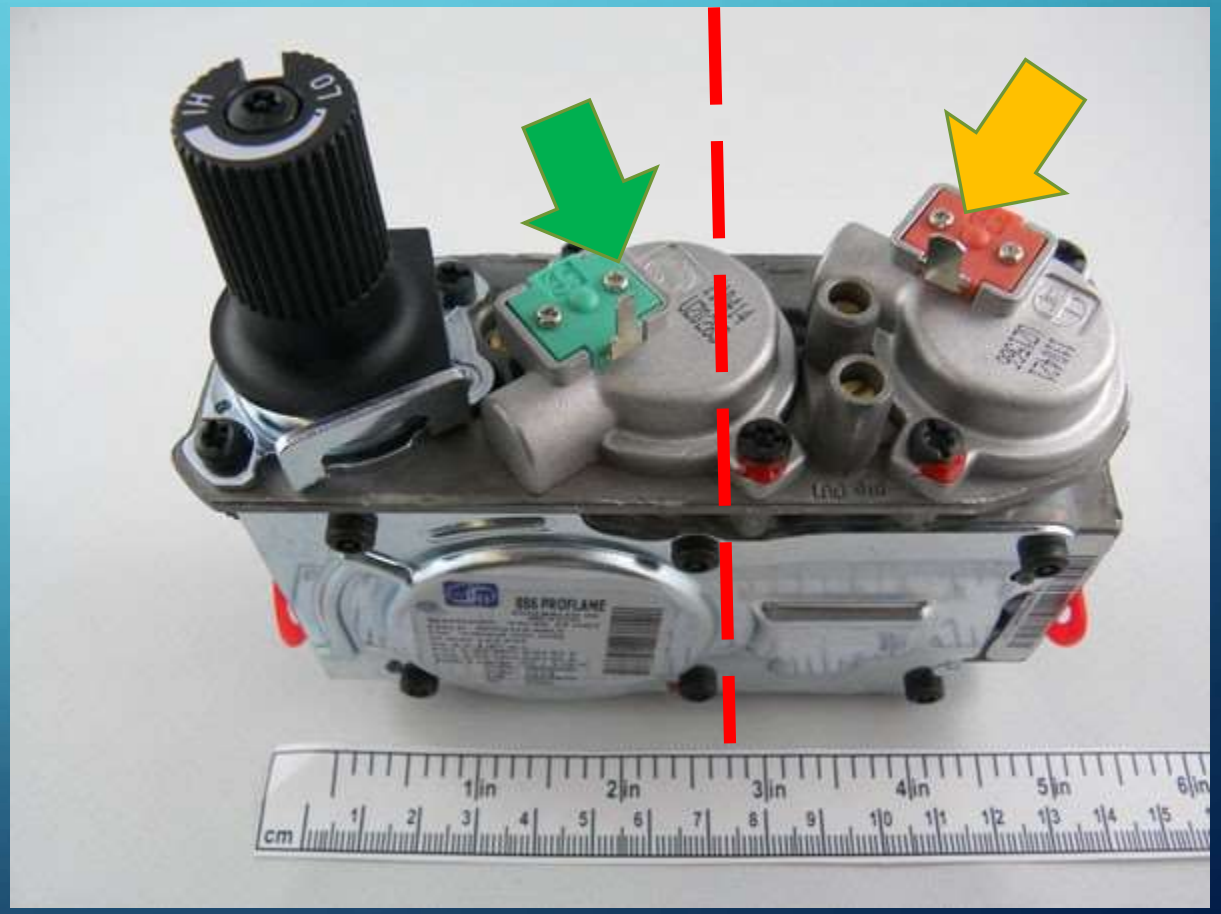

CHECK OPERATOR HEAD RESISTANCE

Measure resistance from spade to valve body. Like millivolt operating heads, Electronic ignition valves are expected to be within a range of relatively low resistance.

Actual measurements:

- SIT 886 ProFlame - 350 Ω +/-
- Signature Command – 58 Ω +/-

Since valve manufacturers may vary specifications by product line, it is best to consult technical at the fireplace manufacturer.

ELECTRONIC IGNITION

THE CONCEPT

(NEARLY) ALL ELECTRONIC IGNITION SYSTEMS USE THE SAME BASIC CIRCUITRY

INTERMITTENT PILOT IGNITION IS THE INDUSTRY STANDARD

technical

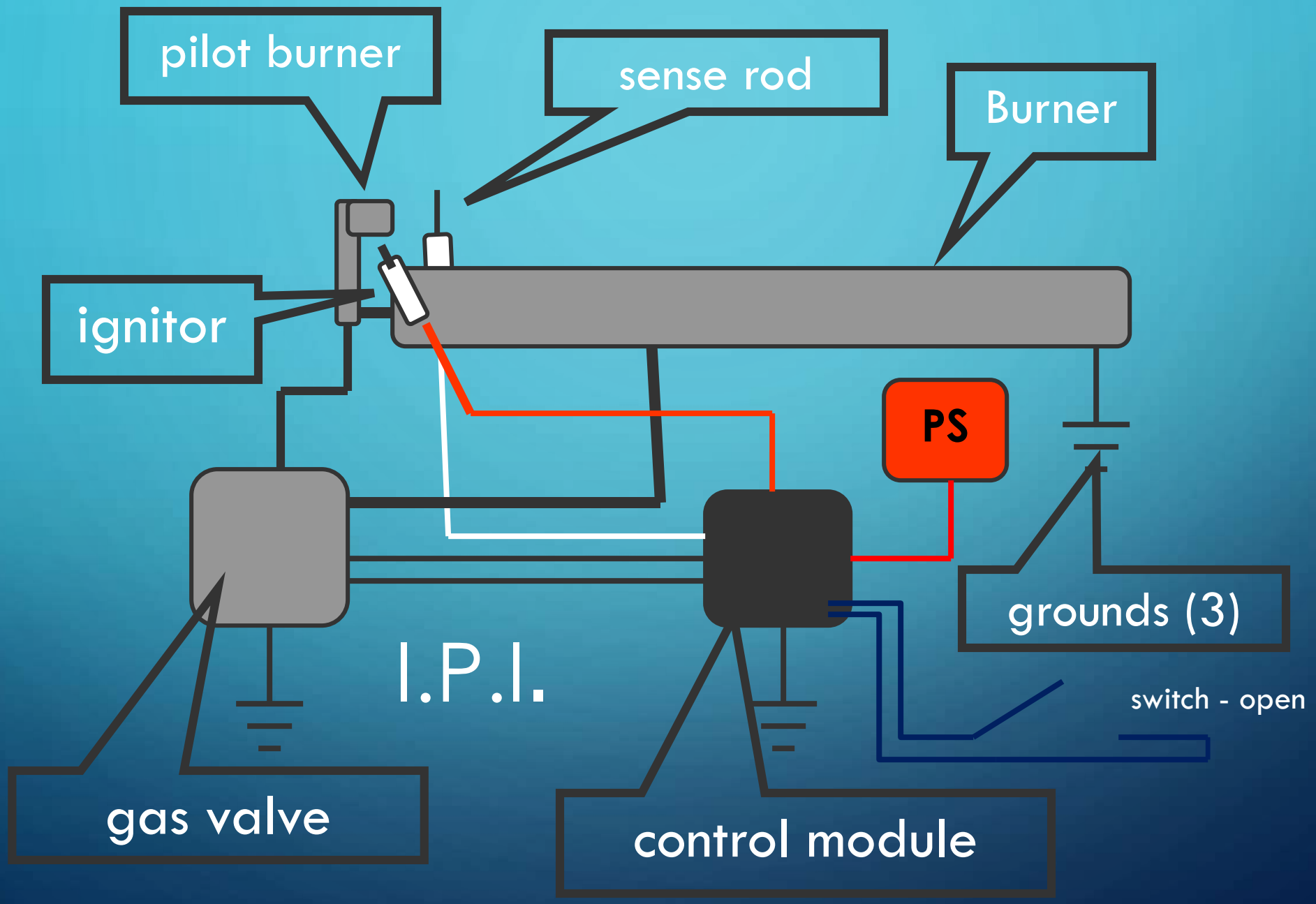
pilot burner
sense rod
Burner
ignitor
PS
grounds (3)
I.P.I.
switch - open
gas valve
control module

1. Ignitor is powered

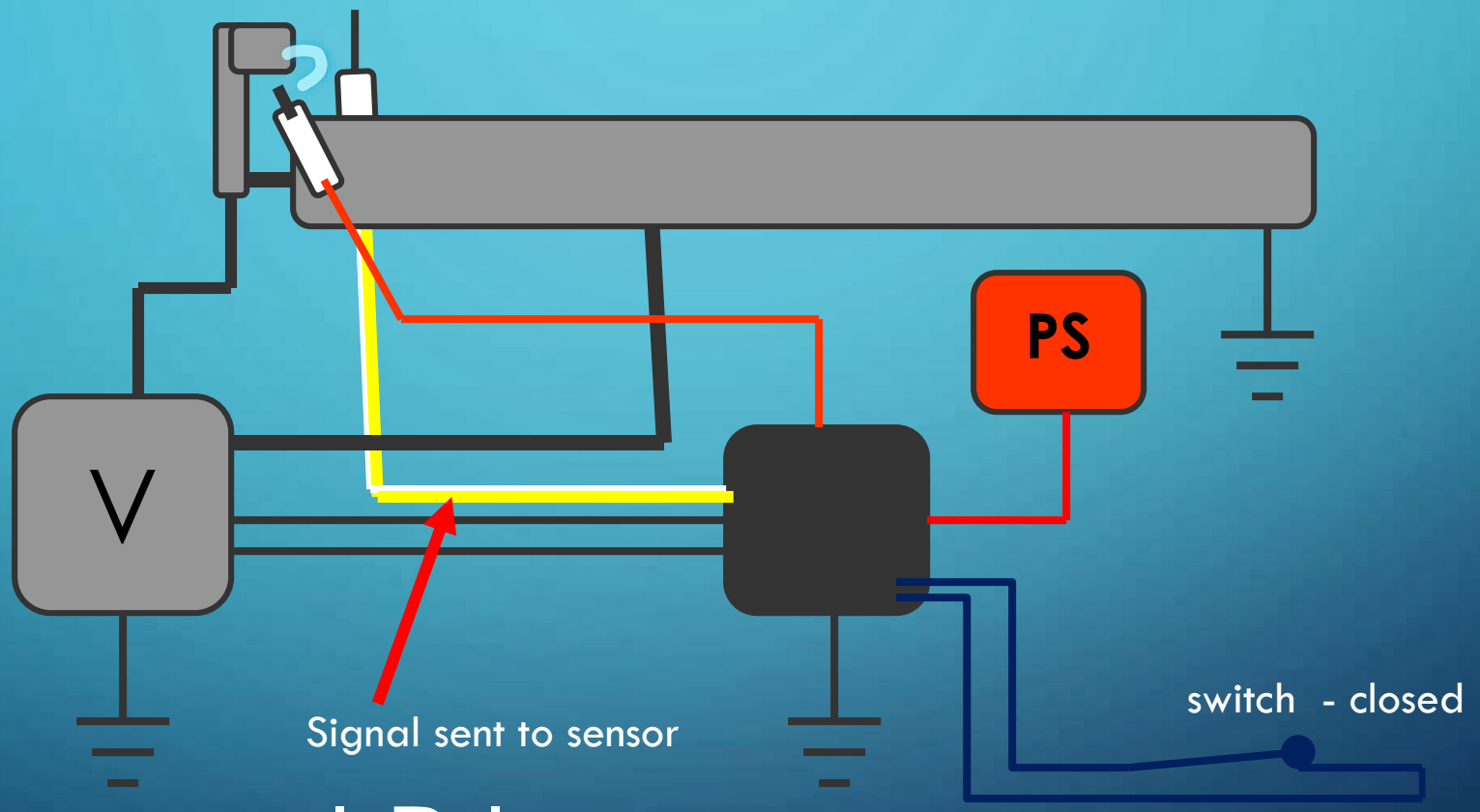

I.P.I.

1. IGNITOR IS POWERED

- Most have a trial period, and then the system will go to “lock out”
- Some older styles had a 3X try rate, and then would go to lock out
- To reset the control, turn off & back on, or interrupt the power (switch off, thermostat down then up)

2. Pilot valve is powered & gas goes to pilot

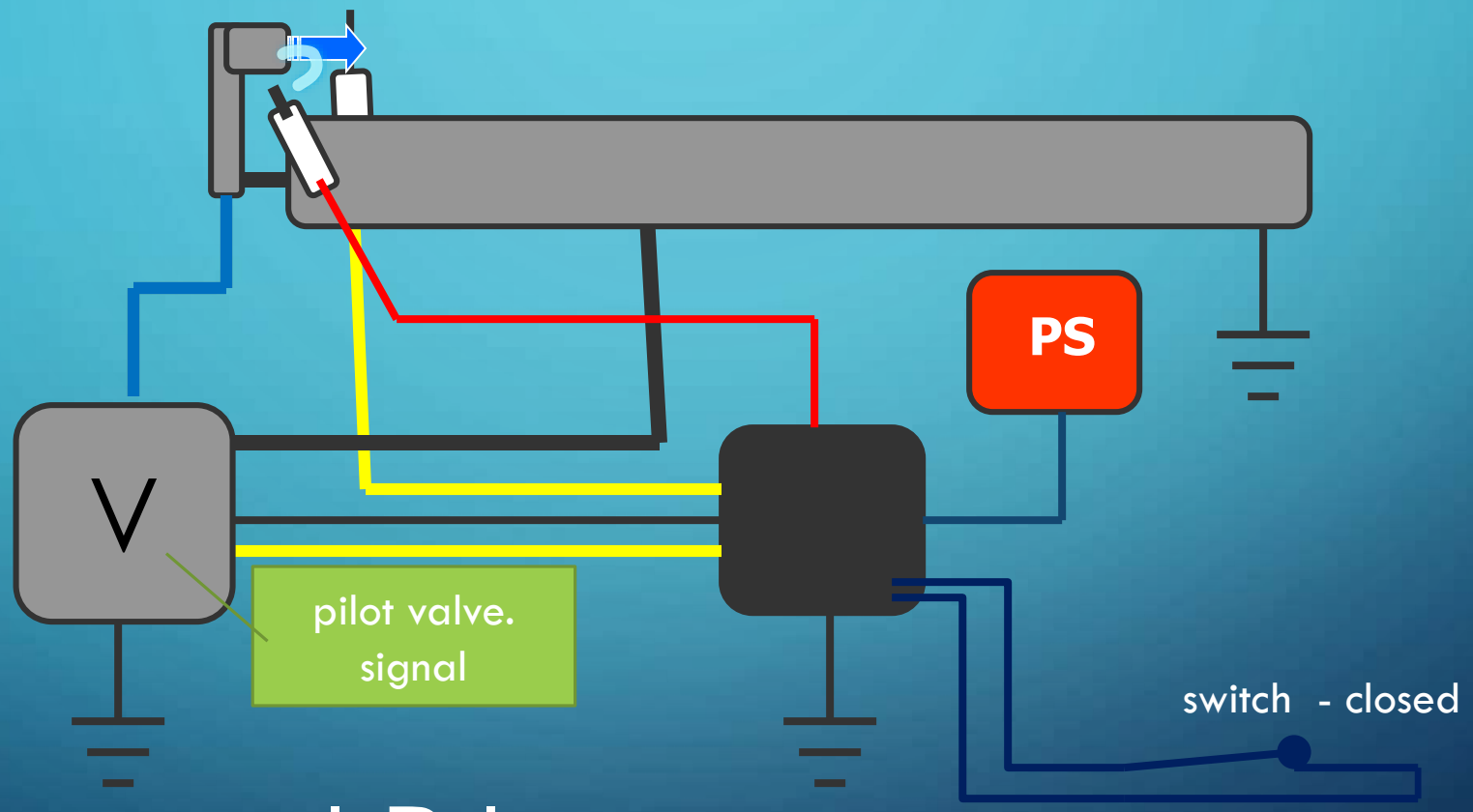

I.P.I.

3. Pilot is lit, pilot flame is sensed

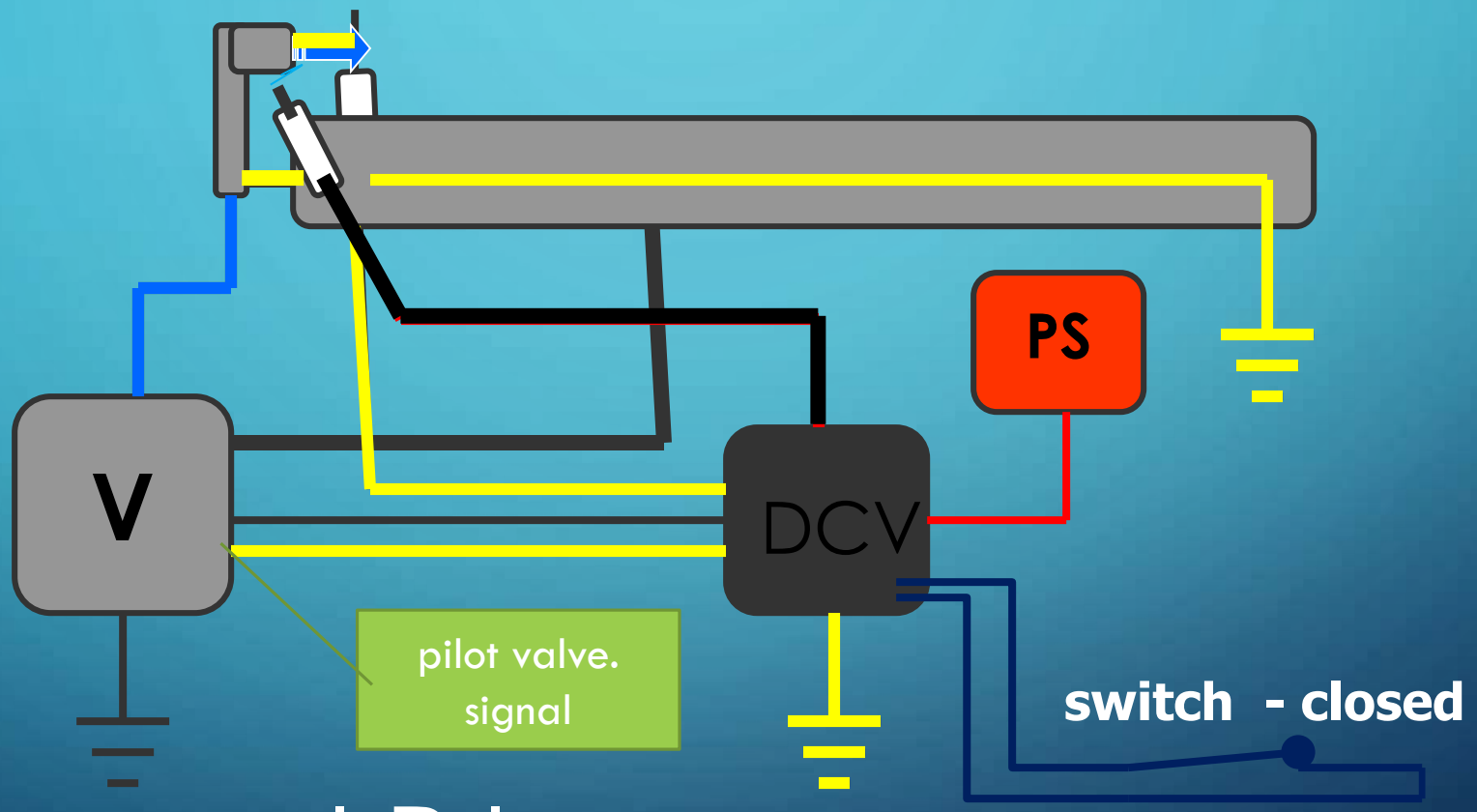

I.P.I.

How is the flame sensed?

FLAME RECTIFICATION

Flame is a conductor of electricity

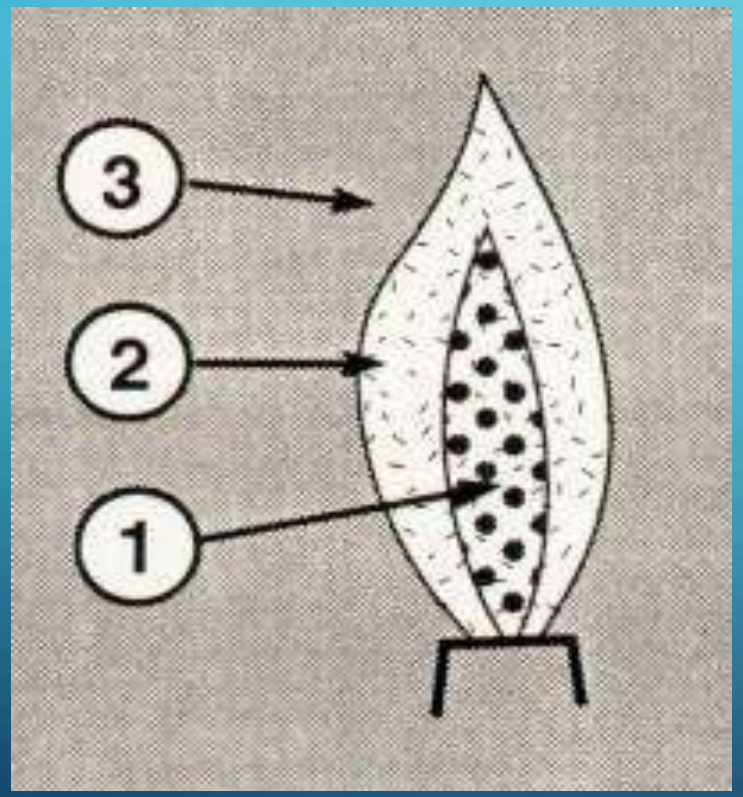

- **Zone 1** Excess fuel (no combustion)
- **Zone 2** Combustion area is ionized and electrons flow
- **Zone 3** Excess Air

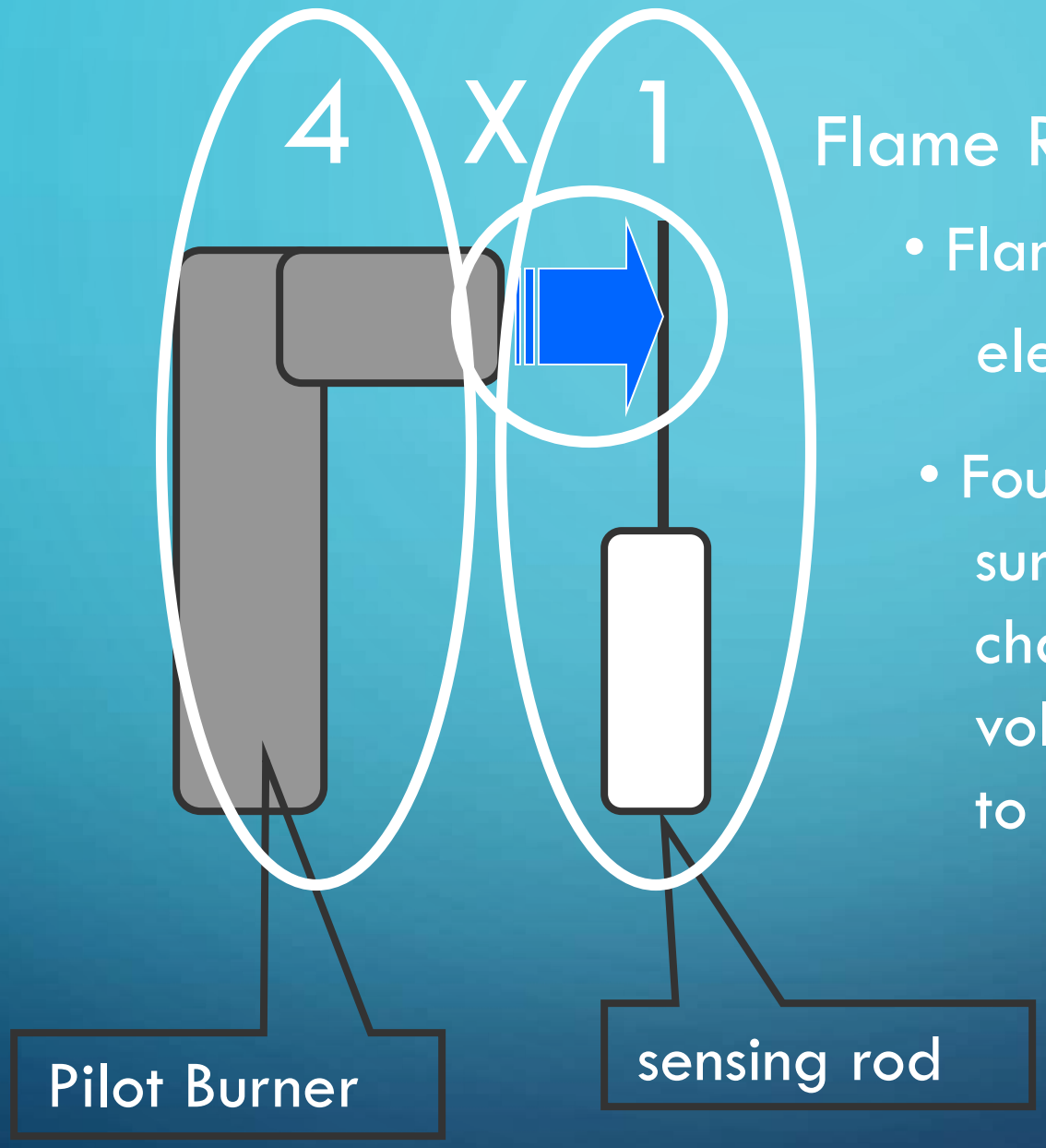

Flame Rectification*

- Flame conducts electricity
- Four+ times the surface area changes the voltage from AC to DC

*most systems do not use rectification to sense flame anymore

TO ILLUSTRATE . . .

Electrons moving from sensor to pilot head (big target)

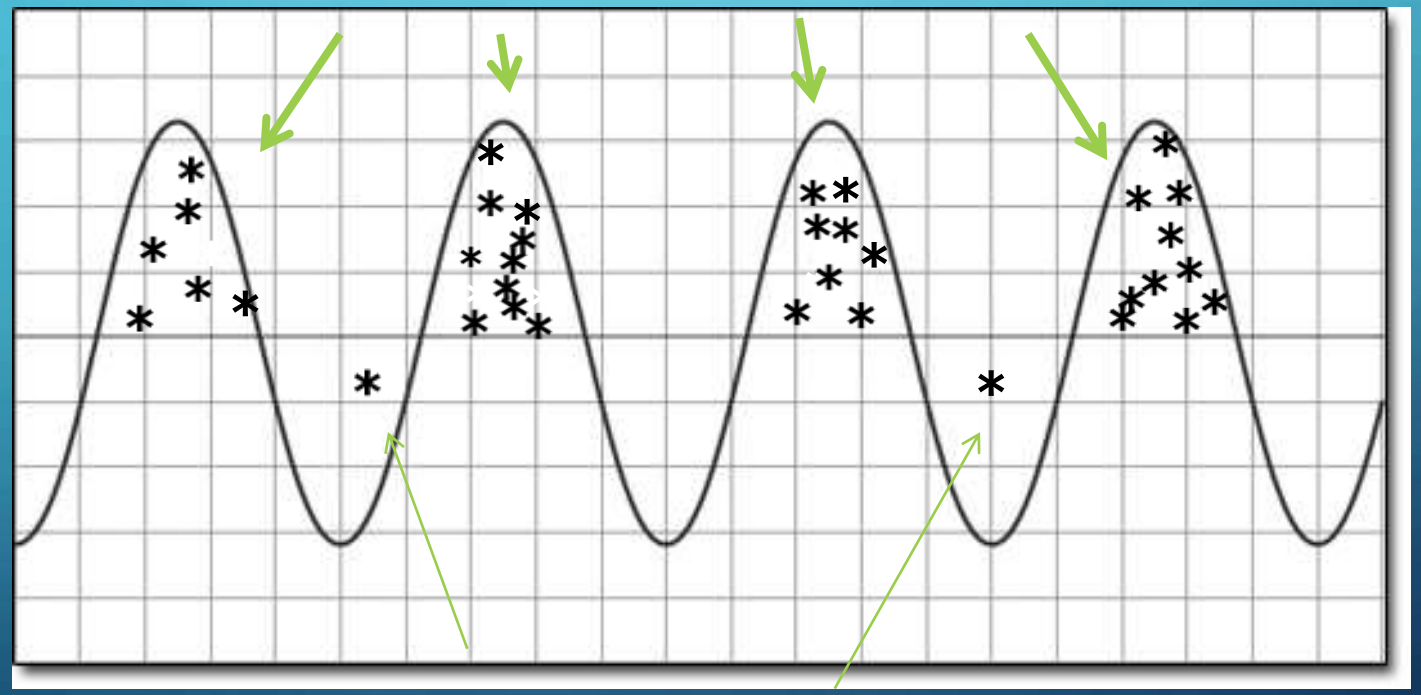

Electrons moving from pilot head to sensor (small target)

SENSING THE FLAME

- Once the pilot is proved (flame rectification or other µA signal) the ignitor will cycle off, the pilot stays burning
- If the ignitor doesn't quit and the pilot is on, then there is a flame sensing problem that must be resolved.

SENSING THE FLAME

- If the ignitor keeps sparking, what is the problem, assuming the flame is hitting the sensor?
- The circuit not closing, so it might be a bad/loose ground, or a dirty sensor. Clean the sensor according to the manufacturer's instructions.

SENSING THE FLAME

- Some systems have a “sensor fail” alarm that can go off immediately when the unit is turned on.
- What kind of circuit is the sensor before there is a pilot flame? Open or closed?
- If the control module gives you a “sensor fail” signal (beeps or flashing lights), what is the problem?

3. Pilot is lit, pilot flame is sensed

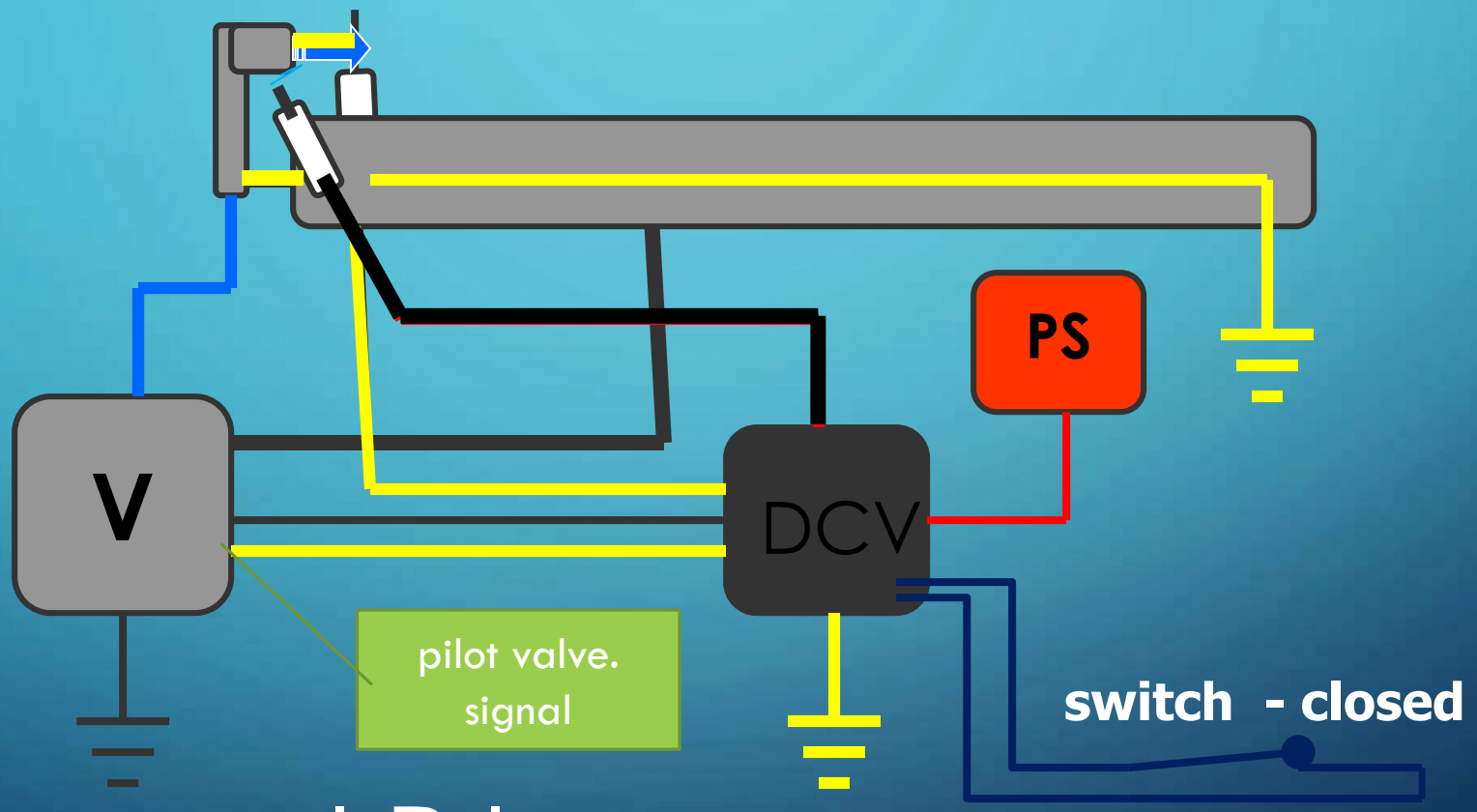

I.P.I.

4. Main valve is powered and burner comes on

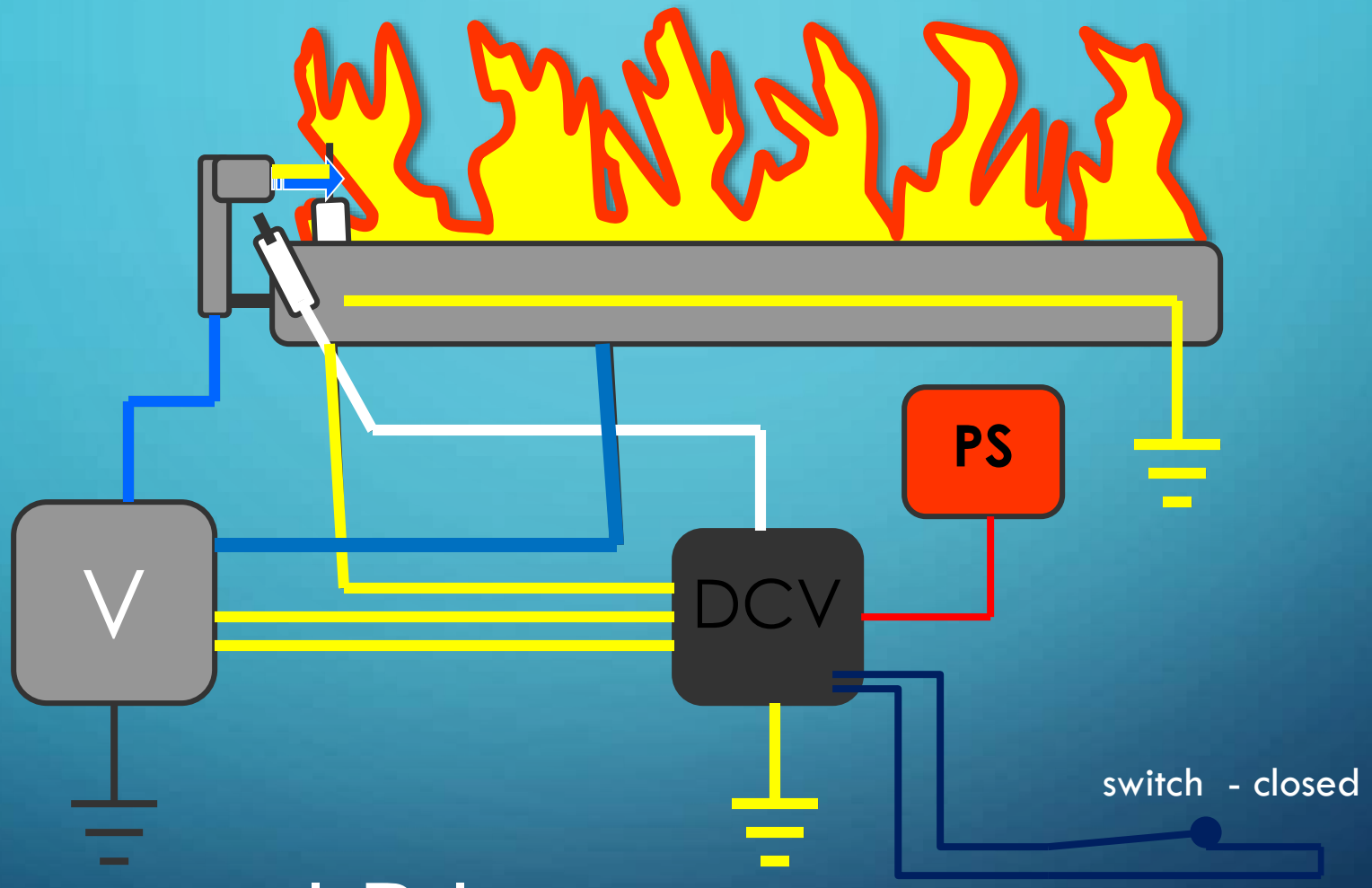

I.P.I.

5.Pilot light flickers or goes out, burner goes out

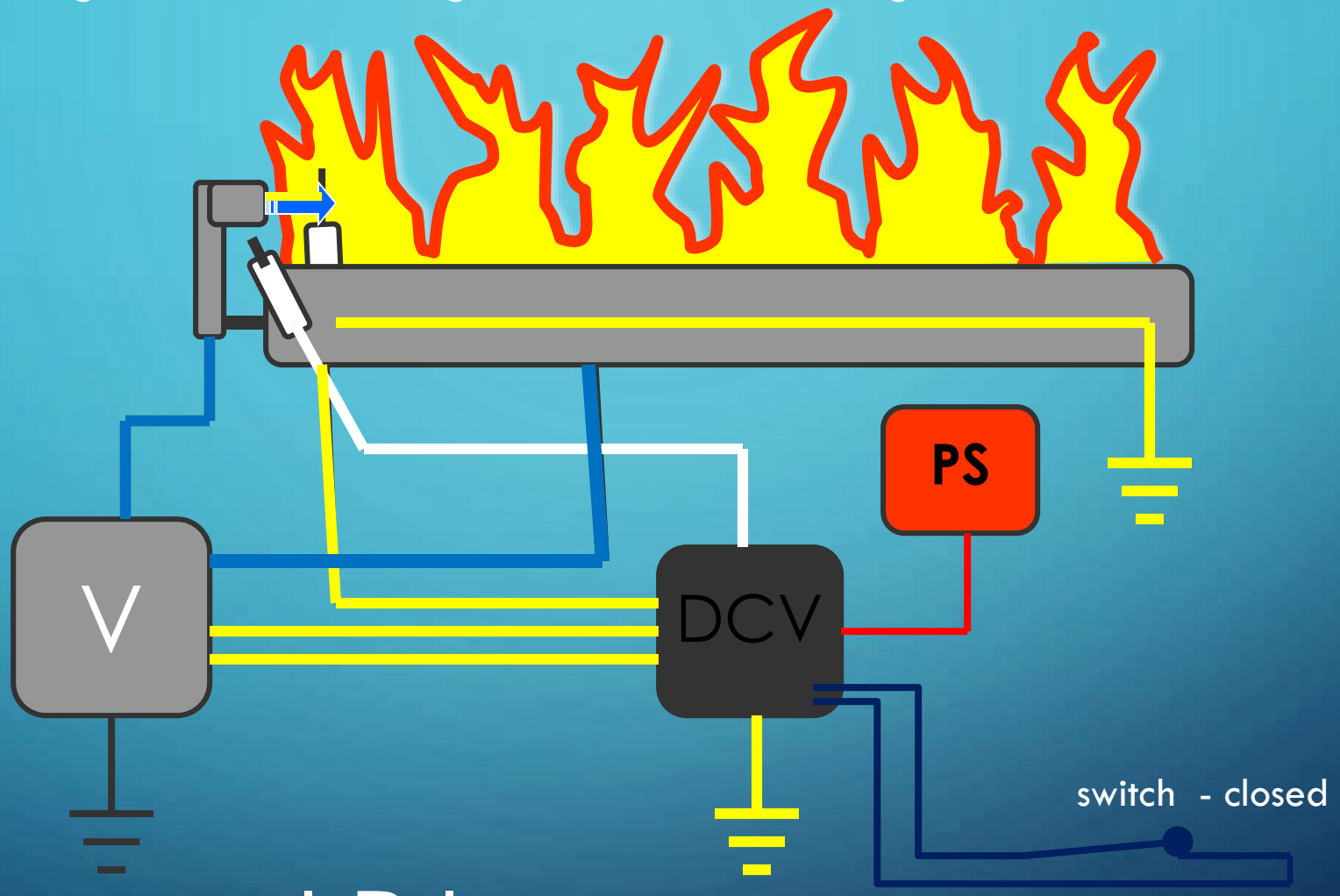

I.P.I.

SENSING THE FLAME

If the flame sense is lost, the burner goes out. Some control module designs only allow a very short period of time (less than a second), so even a flicker will shut down the fire, making the E.I. system more prone to nuisance outage than a pilot with a thermocouple. If you run into this, ask for technical help with calming down the flickering pilot or find out is a newer module has a longer internal timer.

6. System Goes Into Relight Mode

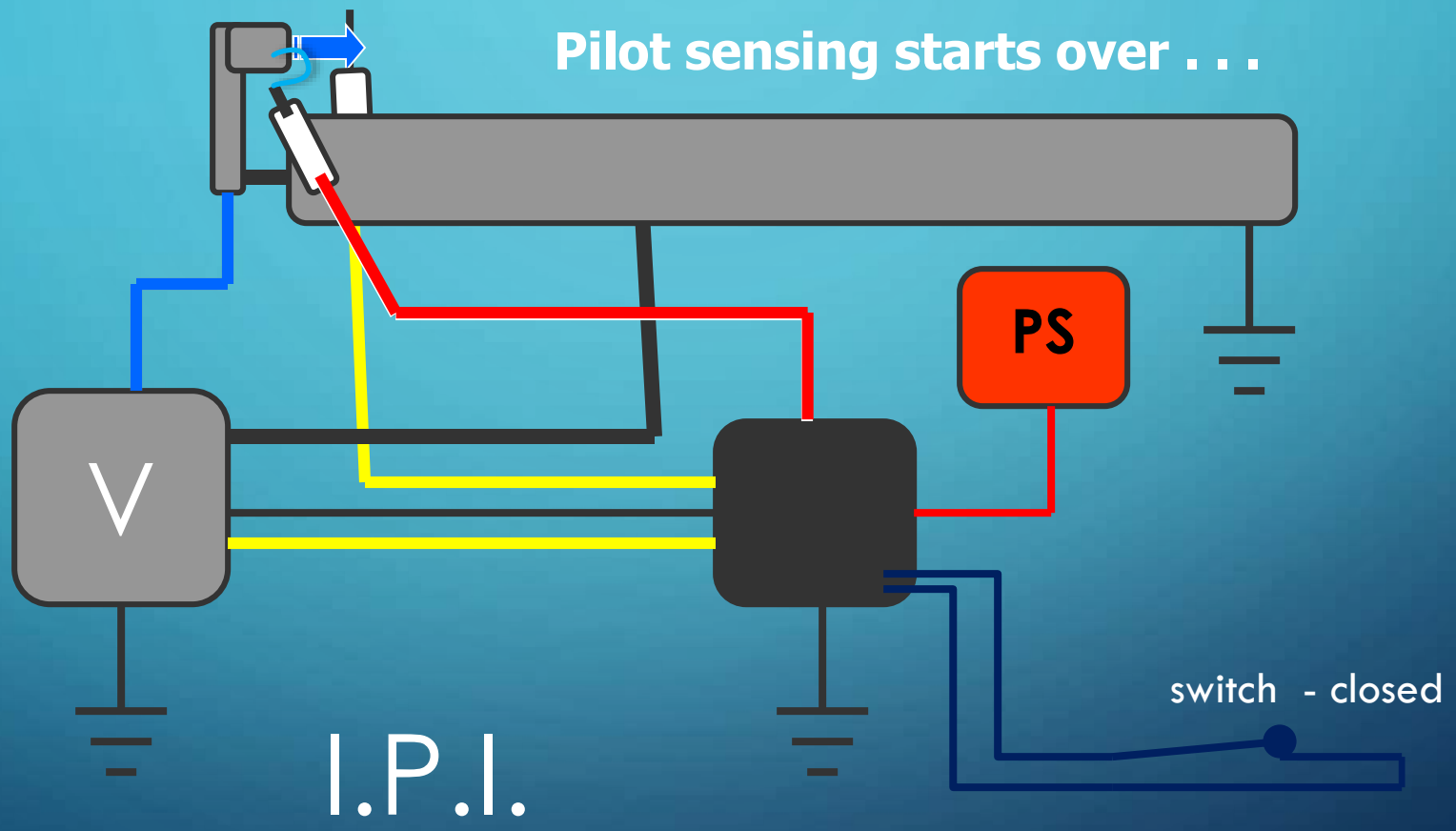

Can the sensor be faked out?

shorted sense rod to pilot hood

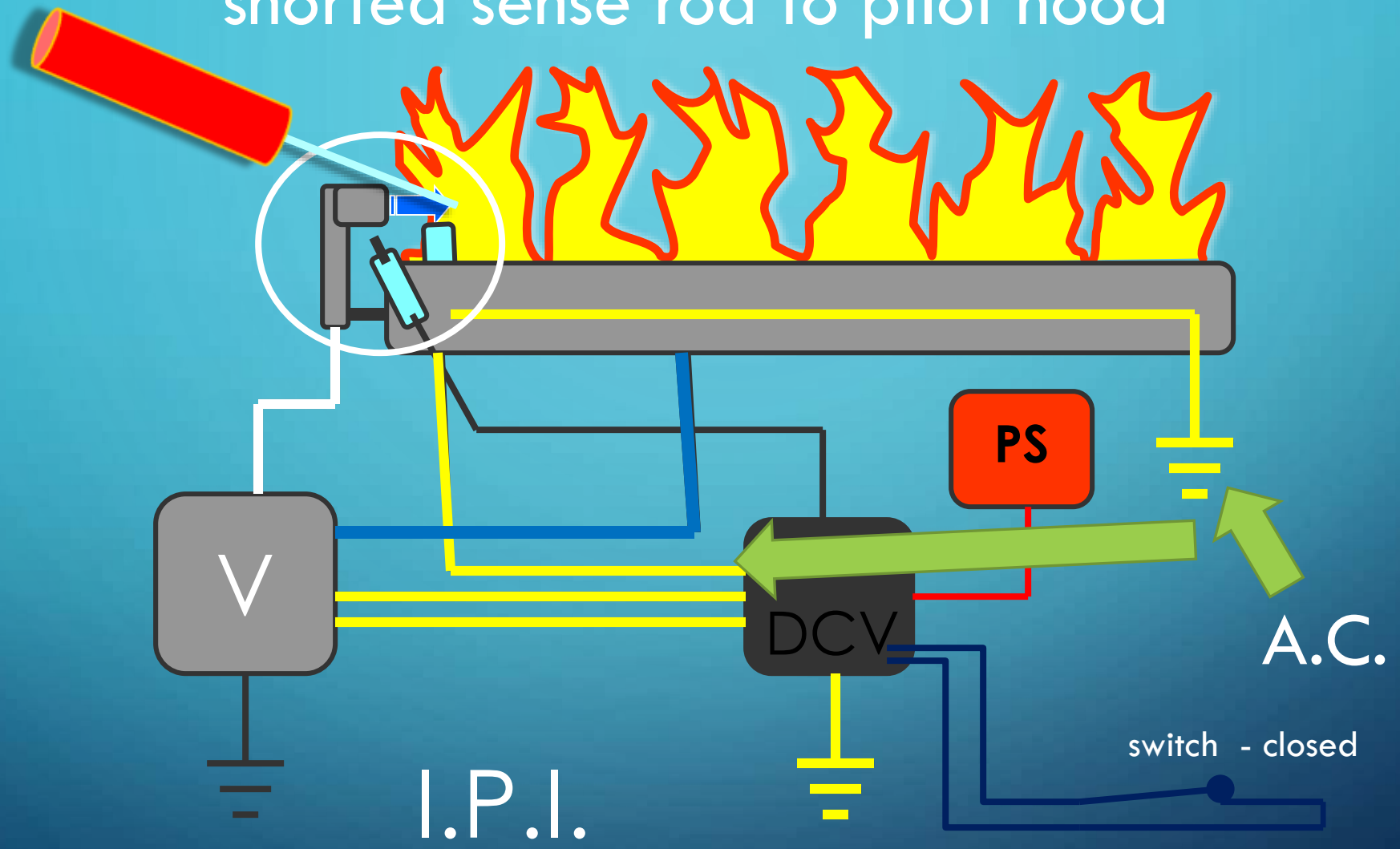

TIP - E. I. GAS CONTROL VALVES

When troubleshooting, you may be able to slide the connector off of the spade far enough to get your alligator clip in there The other clip can go to ground.

Often the voltage to open the valve will spike up and settle down to a lower voltage. It may be difficult to see the spike.

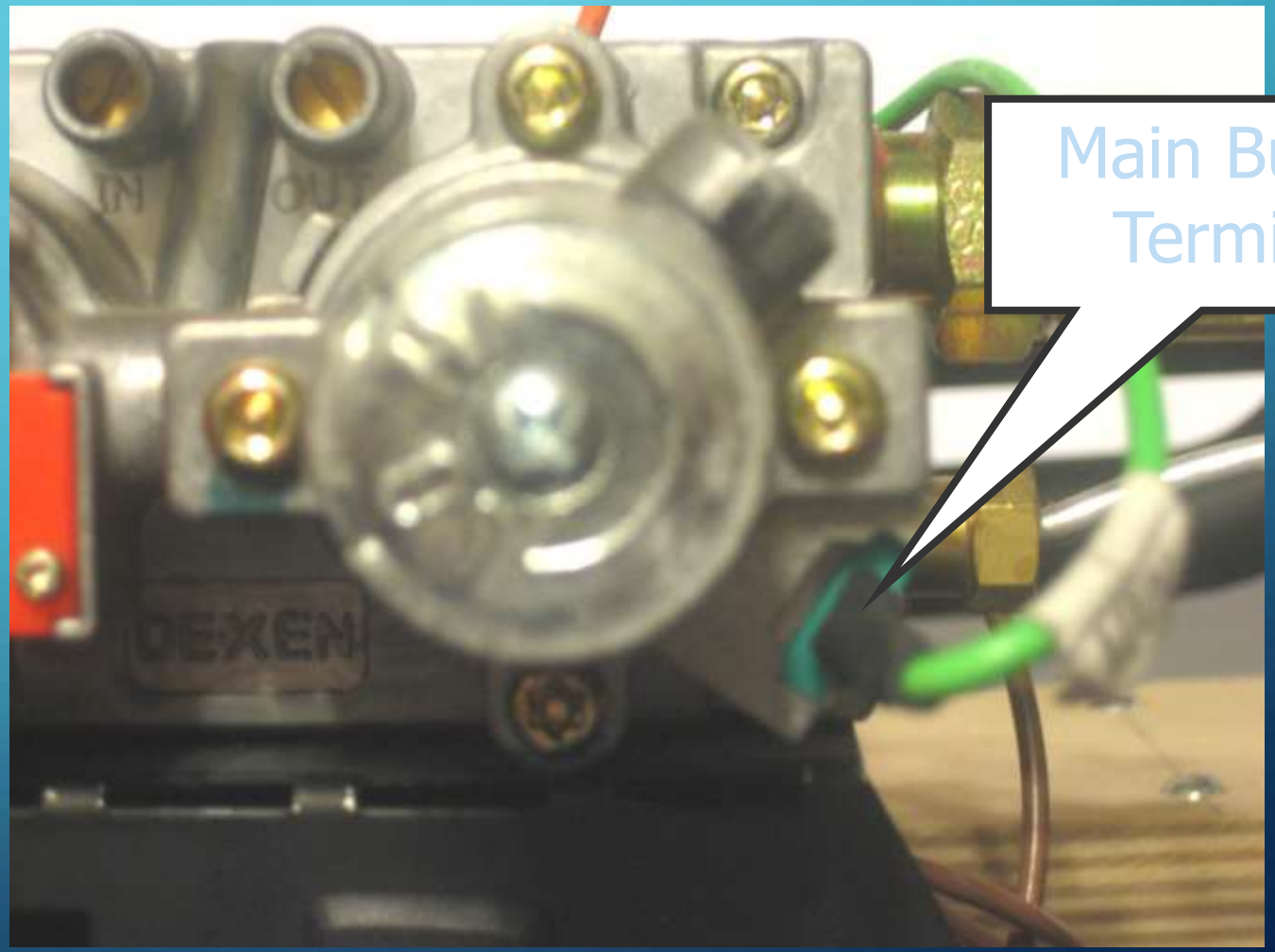

E. I. GAS CONTROL VALVES

There is a common electronic ignition valve system that uses a thermocouple for flame verification instead of an electronic sensing signal.

The thermocouple must heat up in a specific amount of time or the system will shut down and ***not*** go into re-light.

It uses a DC motor instead of an electromagnet on the burner.

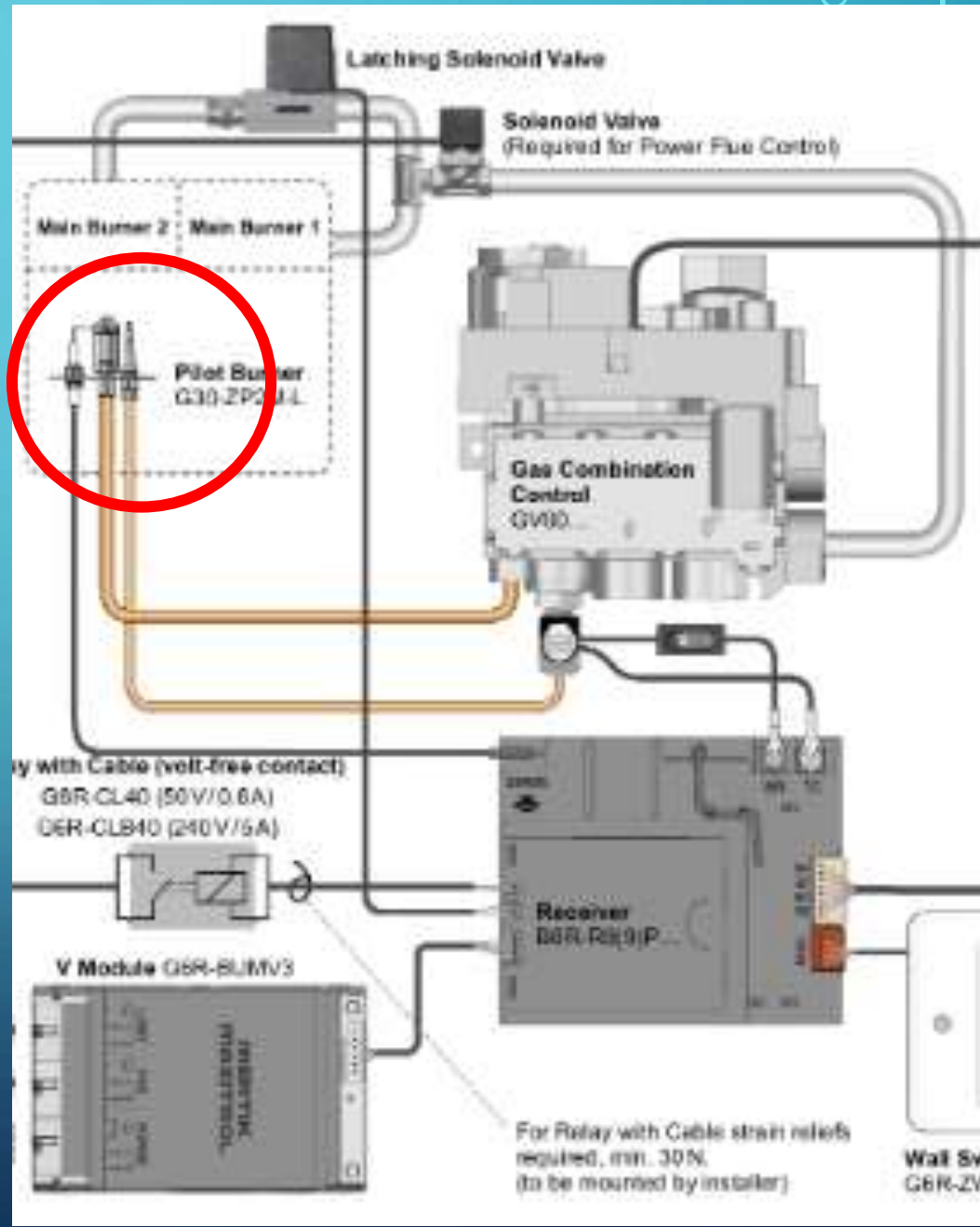

ELECTRONIC IGNITION SUMMARY

- Electronic ignition systems can be some of the more difficult to troubleshoot, but the majority of issues arise from the pilot/sensor side of the valve, and some quick elimination can usually find the problem

GOOD PRACTICES

ISN'T TECHNOLOGY GREAT?

- Snap a photo of a correct setup before you take it apart. You can use it for reference when you put it back together.
- Labels and wiring diagrams are good, but not foolproof.

CHECK BATTERIES

"I just put in new batteries" is just as helpful as "I just had my tank filled"

You need to measure the actual voltage (on every battery) just like you need to check the actual gas pressure.

A brand new single cell is usually about 1.6 volts, and will work until is gets down to about 1.3 volts, but systems vary.

CHECK TRANSFORMER/ADAPTORS

- Be sure to set your meter to AC or DC depending on what type of transformer or adaptor you have

TAKE BATTERIES OUT AT THE END OF THE SEASON

- People often forget batteries in the battery backup or remote control receiver and the may ruin a perfectly good unit with leaking batteries over the summer.

SEPARATE LOW VOLTAGE AND LINE VOLTAGE

We can't seem to prevent electricians from running low voltage and line voltage next to each other. There is a space for a septum, but there is another thing you can do to prevent shorting your valve to line voltage.

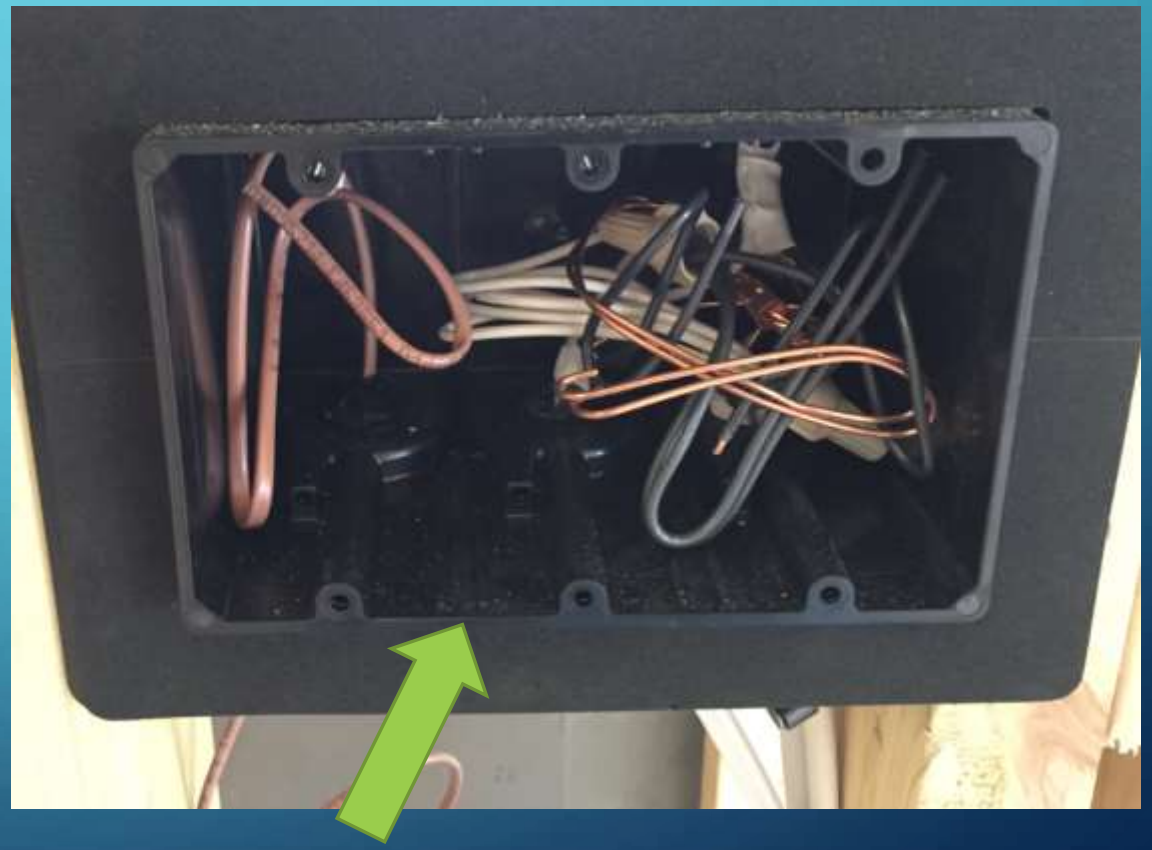

TAPE SWITCHES & OUTLETS

This is what keeps a $1 switch from destroying a $180 valve.

Tape the bare contacts on the switch (don’t strip too much either)

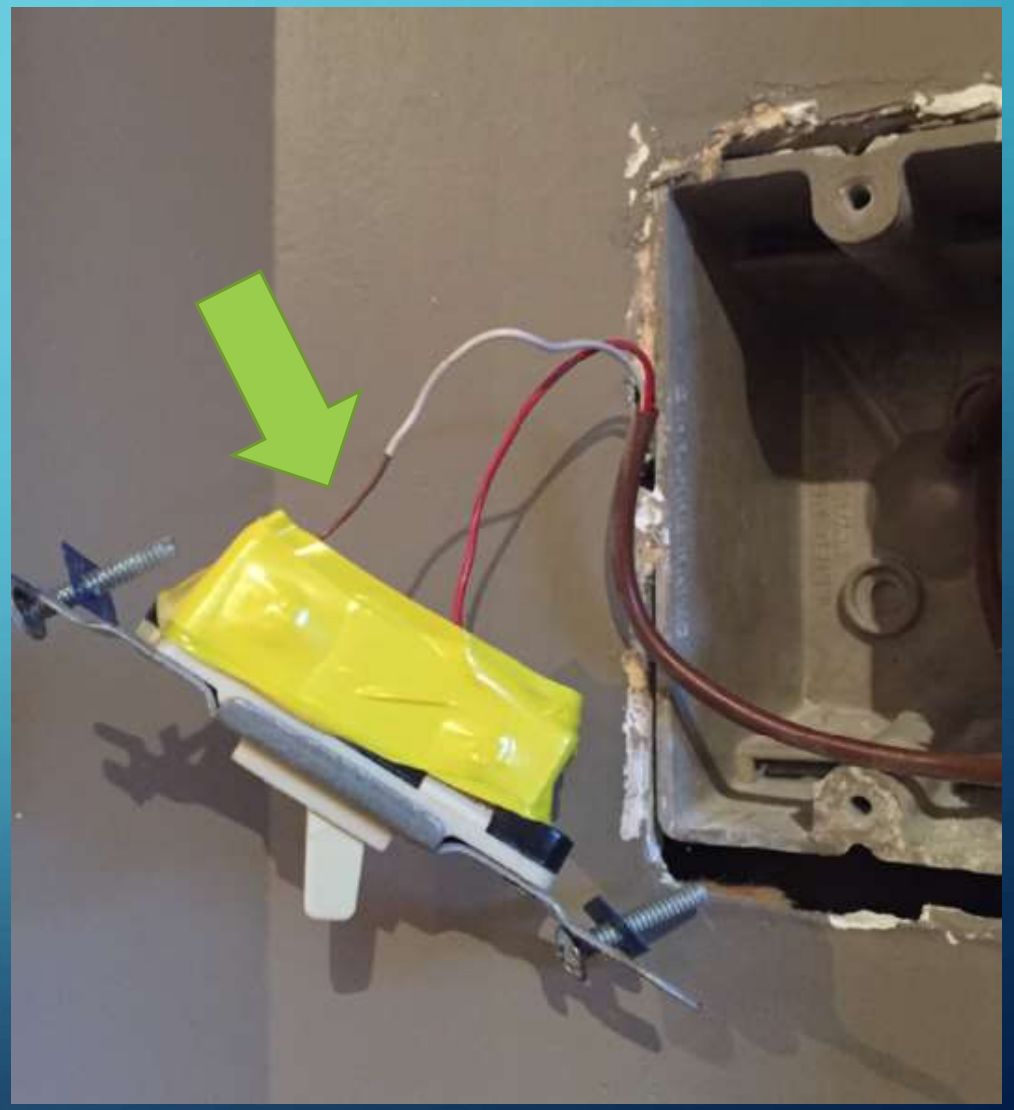

TAPE SWITCHES & OUTLETS

Taping contacts on outlets will also prevent accidentally shorting them out to the bare copper ground or the metal junction box.

SUMMARY

- Many professionals in our business are uncomfortable dealing with electrical issues, but most issues are easy to understand and troubleshoot once the concepts are clear.

SUMMARY

It is important to understand these topics:

- The relationship between voltage, current and resistance
- Electromagnetism & the Seebeck effect
- Open and closed circuits
- Electronic flame sensing
- How to use basic diagnostic tools

QUESTIONS?